Unit:inch

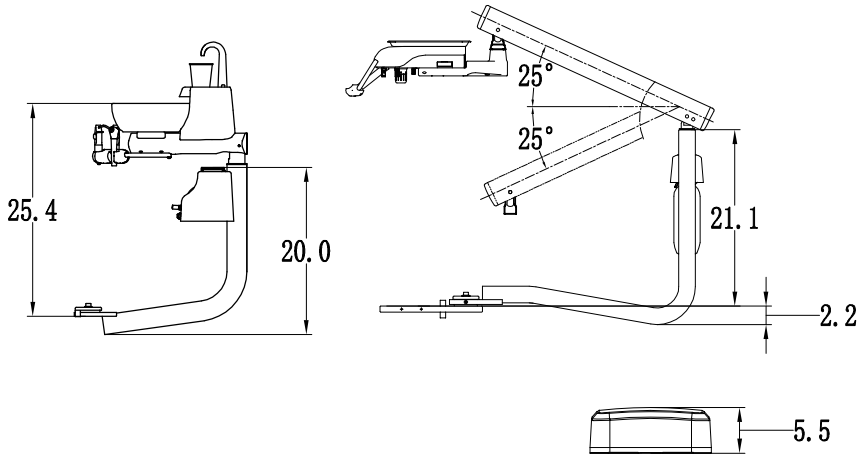
25.4
20.0
25°
25°
21.1
2.2
5.5

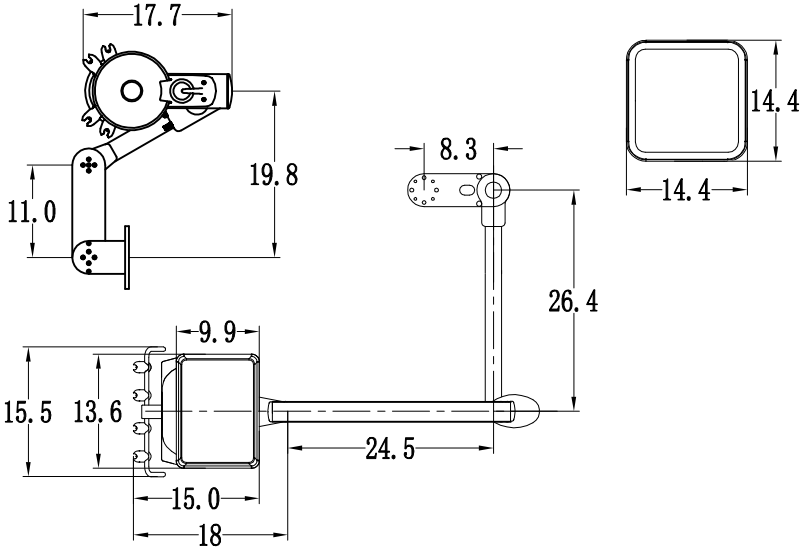
17.7
19.8
11.0
8.3
14.4
14.4
26.4
9.9
15.5
13.6
24.5
15.0
18

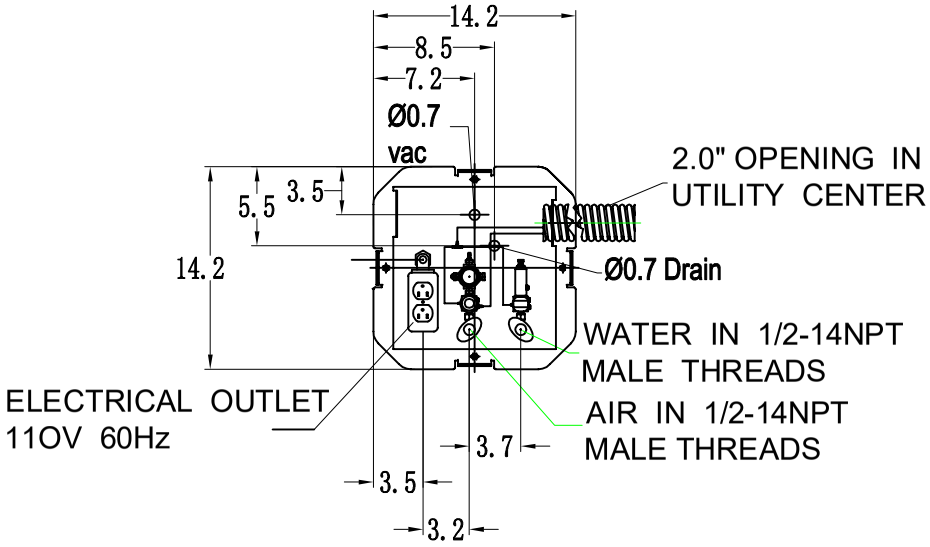
14.2
8.5
7.2
Ø0.7
vac
2.0" OPENING IN
UTILITY CENTER
5.5
3.5
14.2
Ø0.7 Drain
WATER IN 1/2-14NPT
MALE THREADS
ELECTRICAL OUTLET
110V 60Hz
AIR IN 1/2-14NPT
MALE THREADS
3.7
3.5
3.2