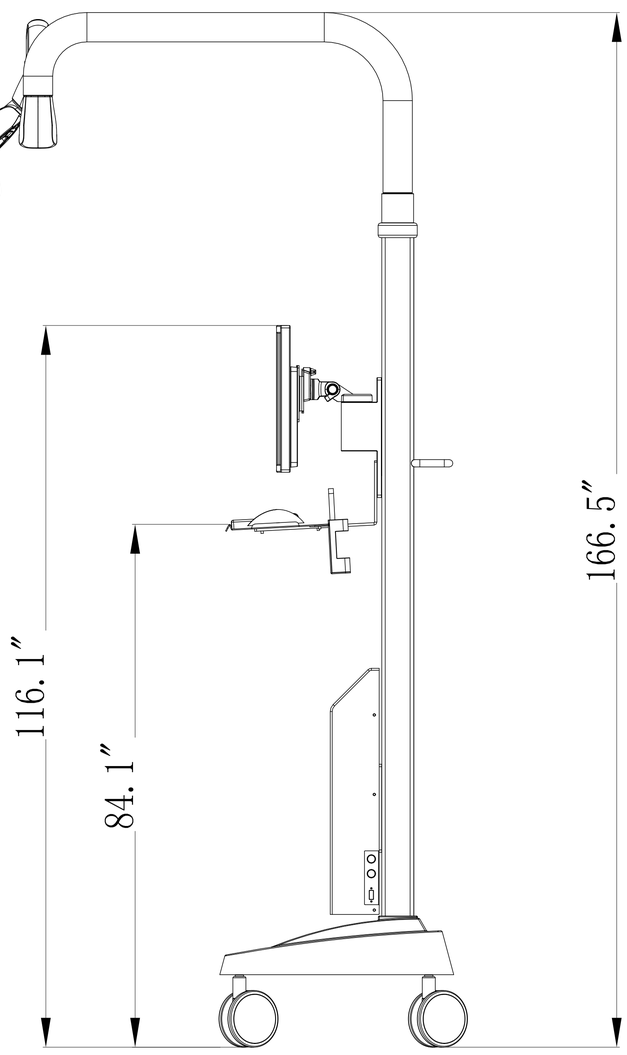
116.1″
84.1″
166.5″

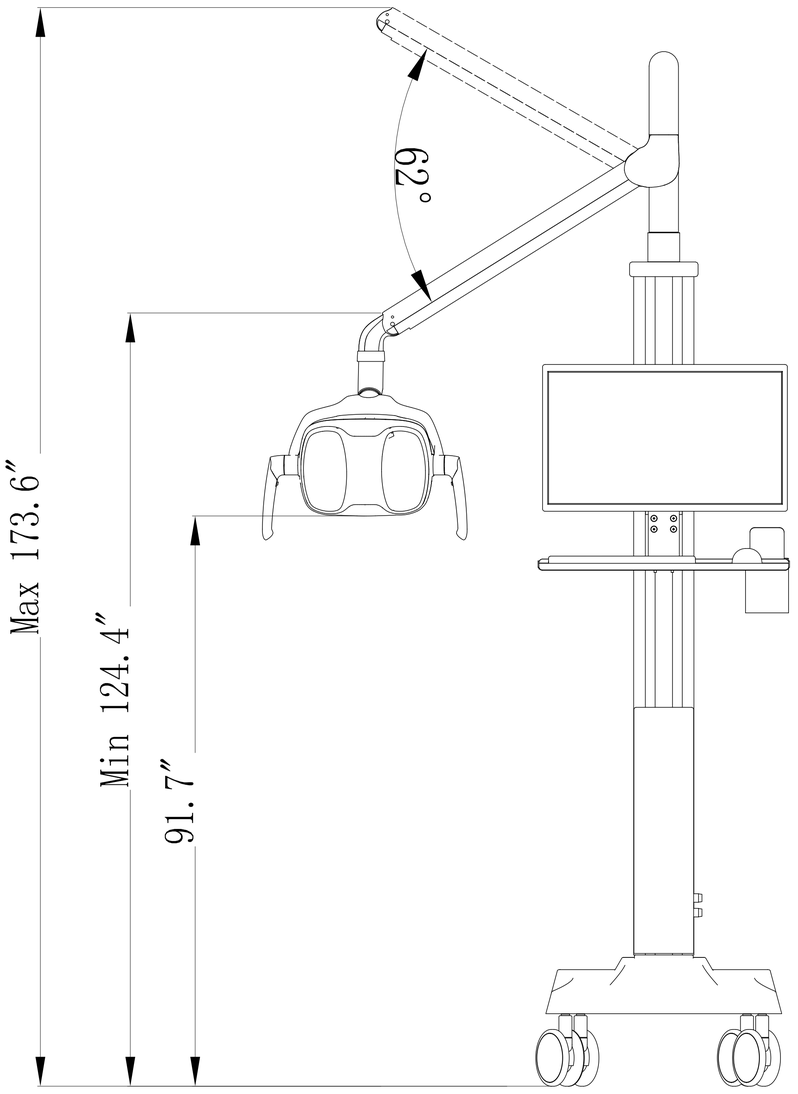
62°
Max 173.6″
Min 124.4″
91.7″

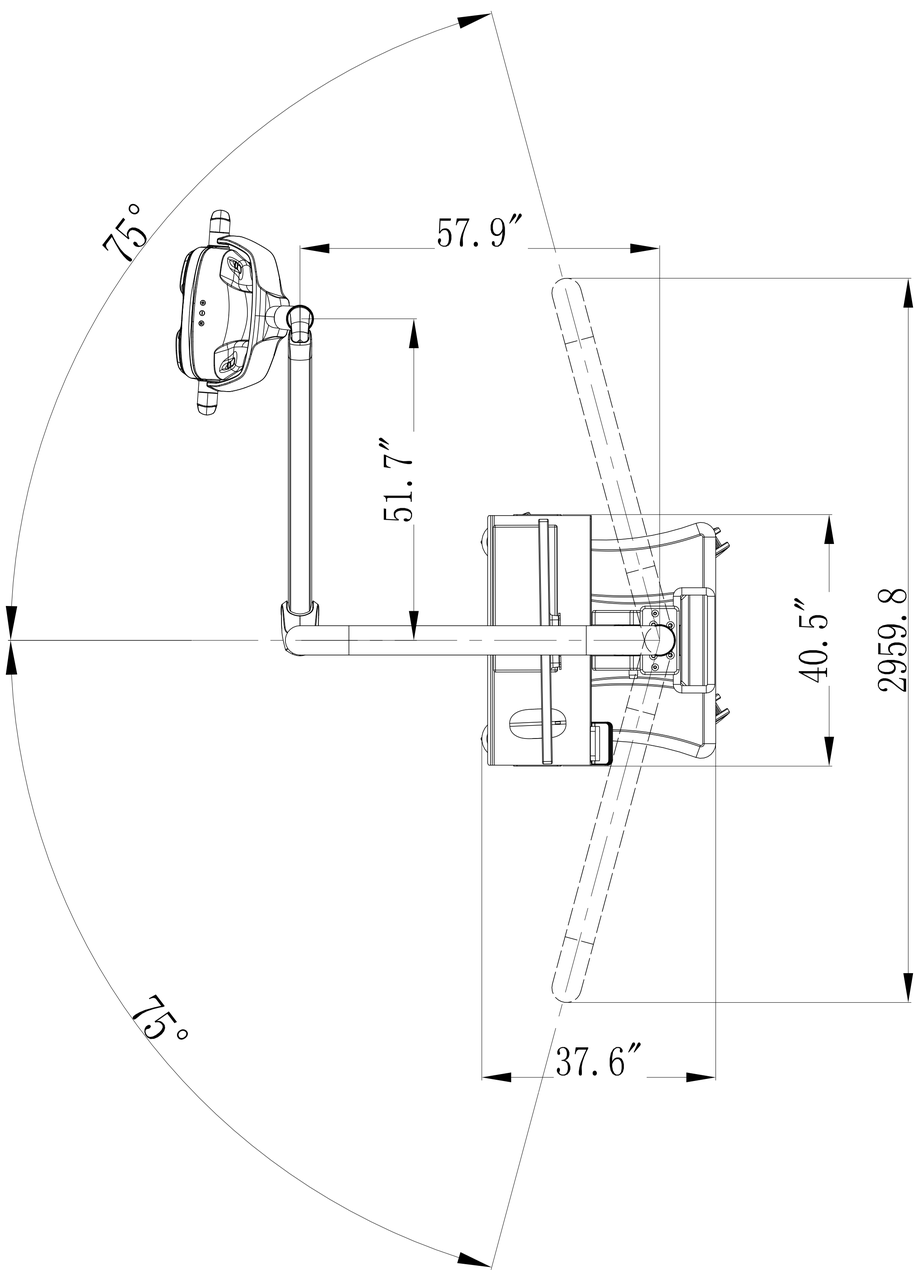
75°
57.9″
51.7″
40.5″
2959.8
75°
37.6″

Unit:inches